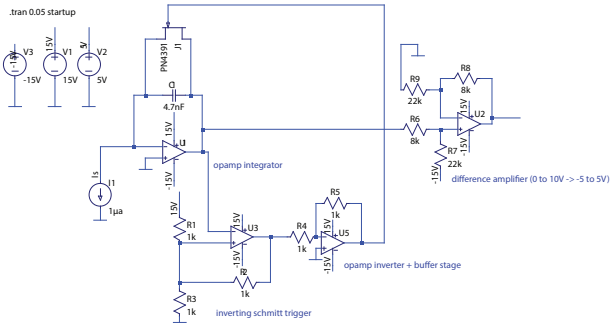
.tran 0.05 startup
V3
-15V
V1
15V
V2
5V
PN439
J1
C
4.7nF
U1
opamp integrator
Is
I1
1µa
R1
1k
U3
R2
1k
R3
1k
inverting schmitt trigger
R4
1k
R5
1k
U5
opamp inverter + buffer stage
R9
22k
R8
8k
R6
8k
U2
R7
22k
difference amplifier (0 to 10V -> -5 to 5V)